Assembly The Robot

Adjust the servos before installation

1.Why adjust the servos?

All servos must be adjusted to 90 ° before installation. Since we do not know the actual degree of the servo we received, please follow our tutorial to adjust the angle of the servo.
The picture below is the first posture after the robot is installed and powered on. The robot can run perfectly only if the servo of the robotic arm is correctly installed.

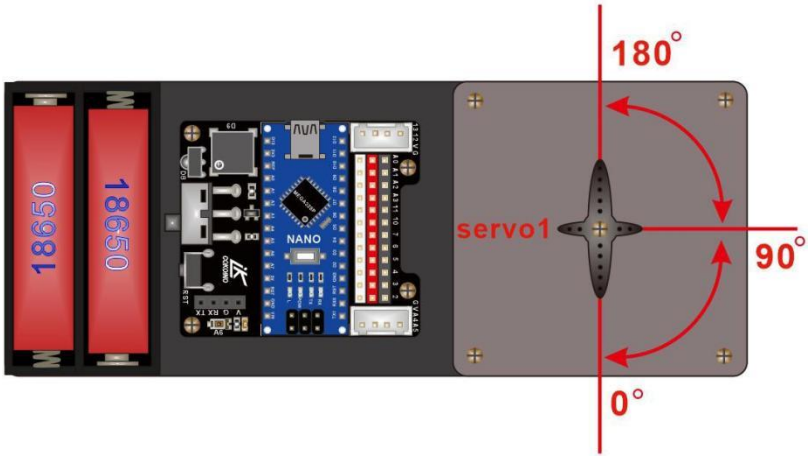

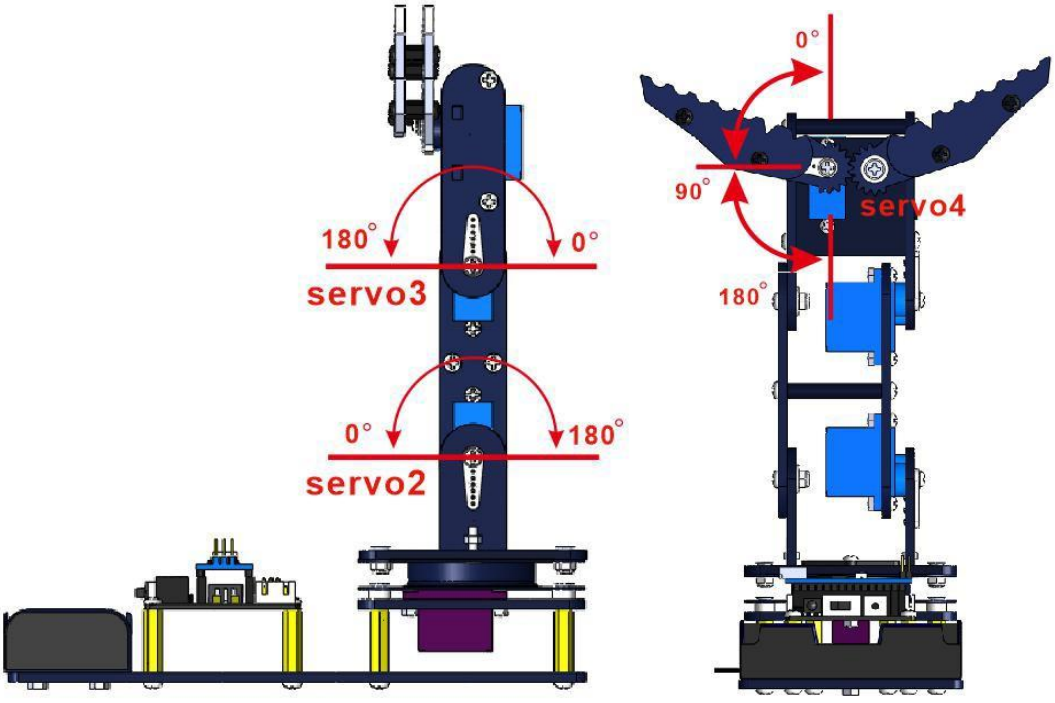

2.Adjust the angle of 4 servos to 90 degrees

2.1 Please connect the 4 servos, the nano board, nano shield, and battery case with two 18650 batteries together, as shown in the figure below, and then connect them to the PC via a mini USB cable.

NOTE:

Servo 1, 2, 3, 4 are connected to Pin4, 5, 6, 7 of shield respectively

Make sure your two 18650 batteries have enough power

Turn on the power switch of the shield since the current provided by the usb is not enough to drive the servos

The brown, red and orange wires of the servo are connected as shown below

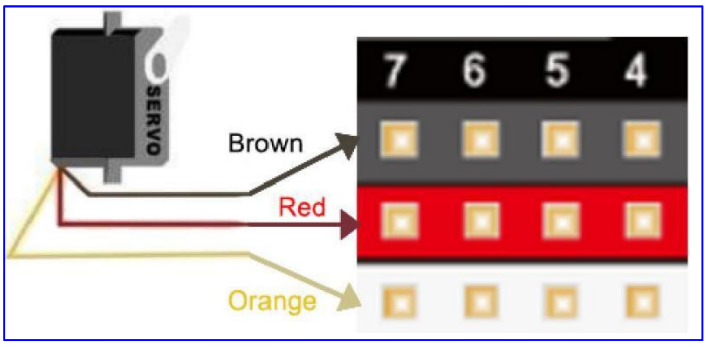

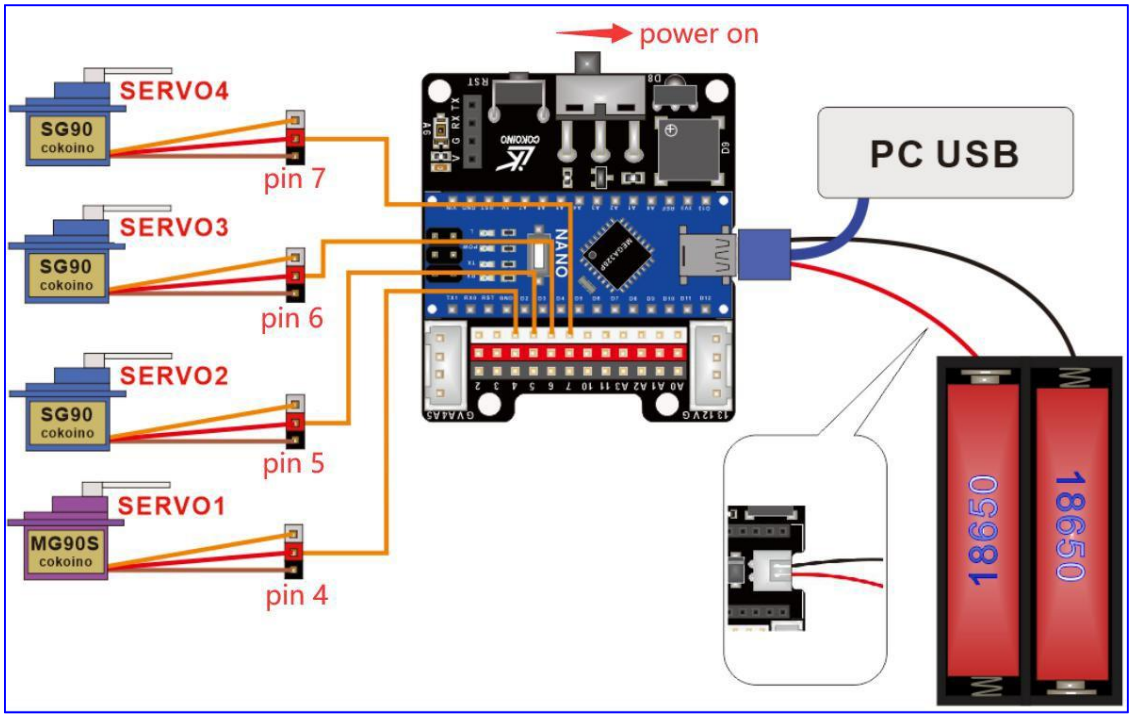

2.2 Find the "Servo_90_ADJ" code from the following path, open it with the Arduino IDE and select the board type and com port of the IDE.

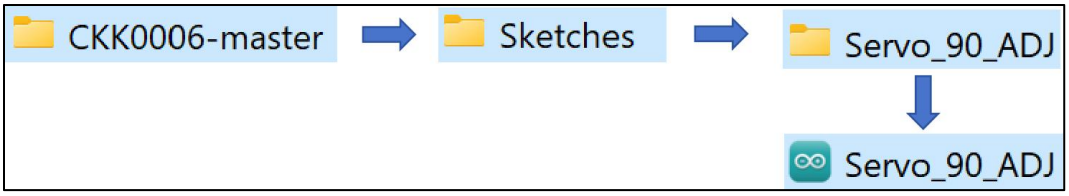

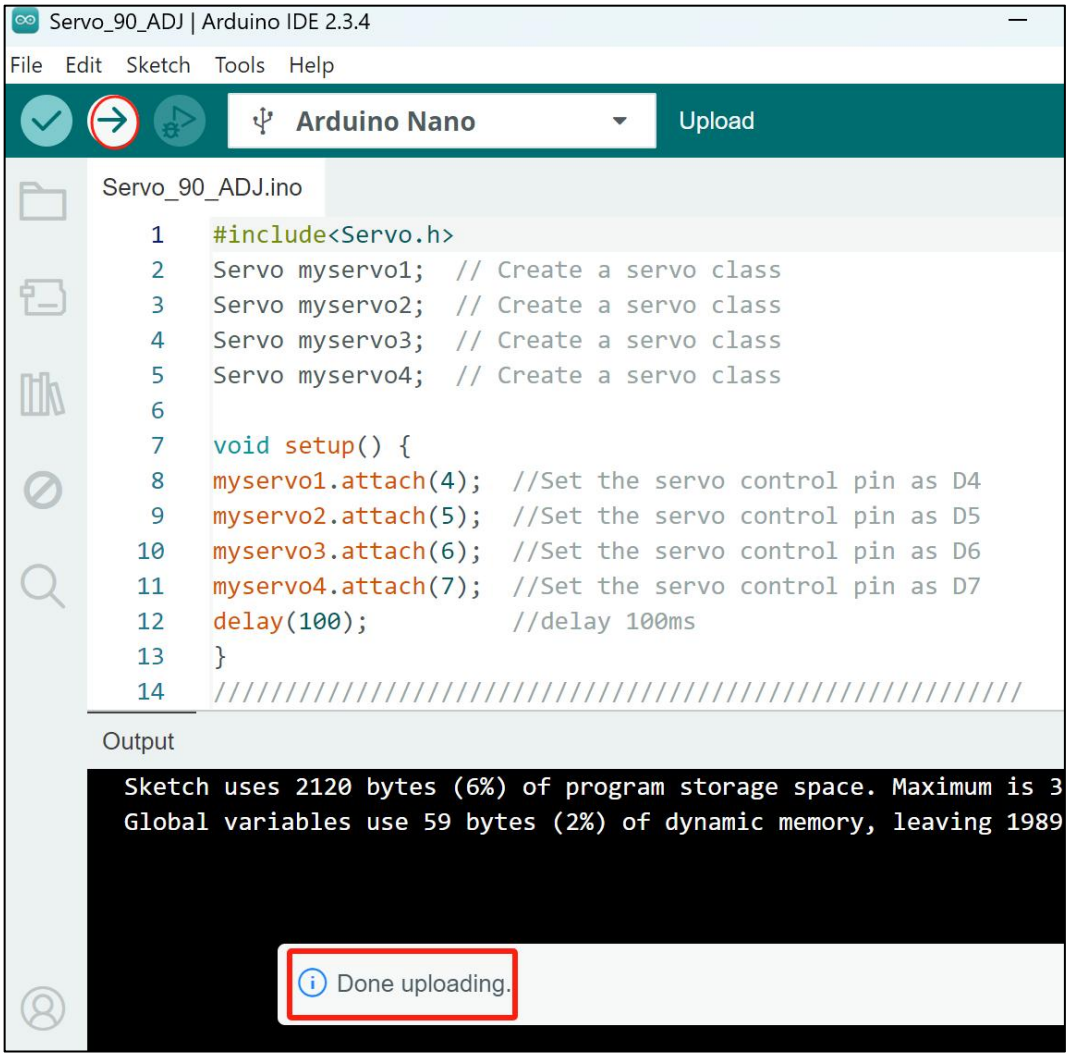

Upload the code and turn on the power switch on the shield, all the servo servos will be adjusted to 90 degrees.

If you find that the servo shaft is not turning, please review the notes above for troubleshooting.

Assemble the robotic arm

Video link for assembly:
https://www.youtube.com/results?search_query=cokoino+robotic+arm+assembly
It should be noted that the video does not show the steps to adjust the servo to 90 degrees. We must first adjust all the servo to 90 degrees before referring to the video for assembly. You can also assemble according to the following document steps.

Start assembly

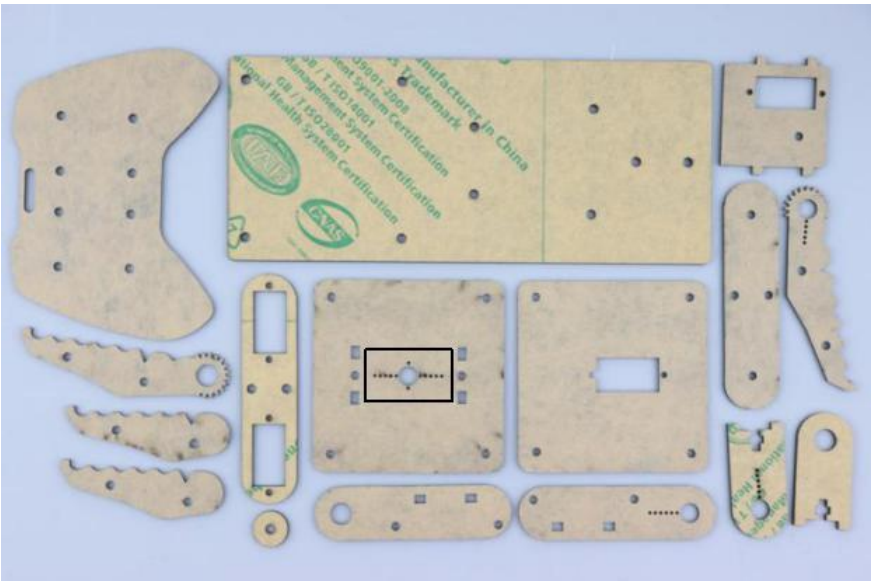

1. Before assembly, we need to use a screwdriver to peel off the acrylic sheet

Step 1：Assembling the Battery Case		Tool：
Need to prepare：		
acrylic plate A	1	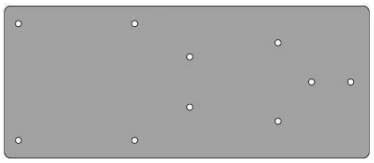

the Battery Box	1	
M3 * 8 countersunk head screw	2	
M3 nut	2	

Demo：

Use M3 * 8mm countersunk head screws and M3 nuts to install the battery box on the structure A; Pay attention to the installation direction of the battery case;	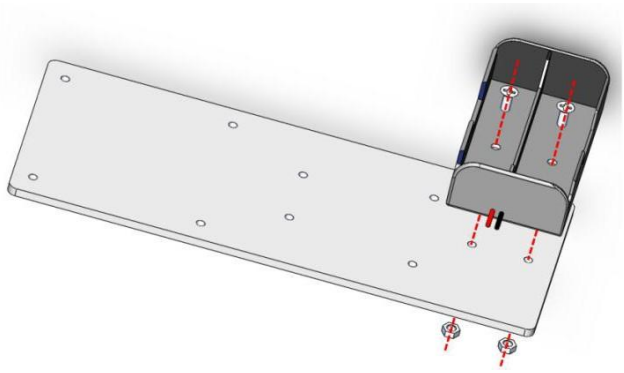 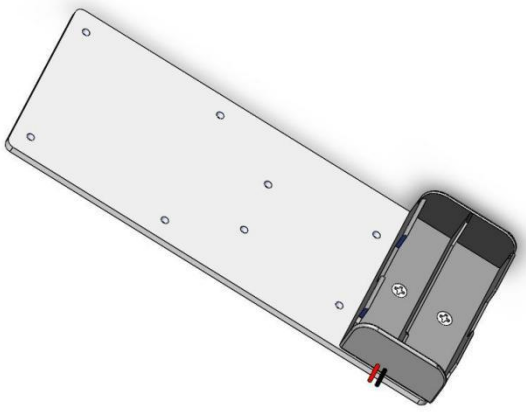

Step 2：Assembling the M3 * 20MM hexagon copper pillar		Tool：
Need to prepare：		
M3 * 20mm hexagon copper pillar	8	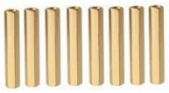
M3*6 mm nut	8	
Step 1 structure	1	
Demo：		
Use M3 * 6,, round head screws to install M3 * 20mm hexagonal copper pillars on structural member A;		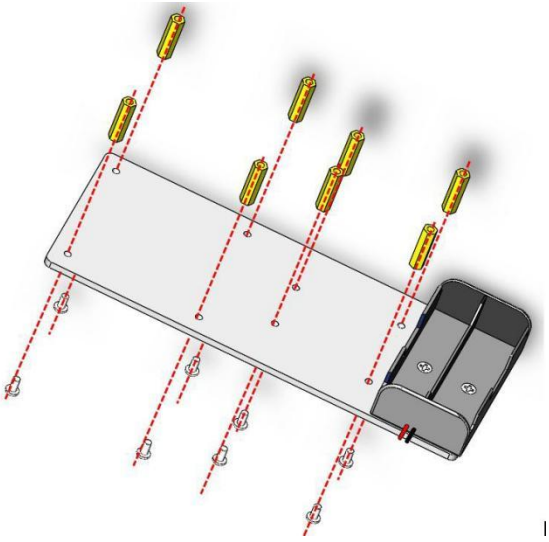 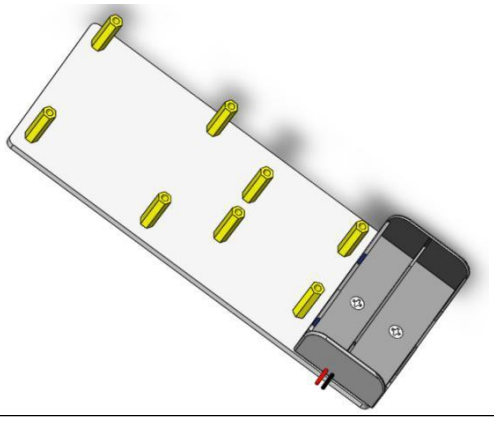

Step 3：Assembling nano board and nano shield		Tool：
Need to prepare：		
M3*6mm round head screw	4	
Nano board	1	
Nano shield	1	
Step 2 structure	1	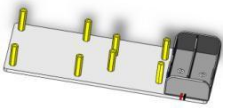
Demo：		
Use M3 * 6mm round head screws to fix NANO and NANO expansion board on structure A;		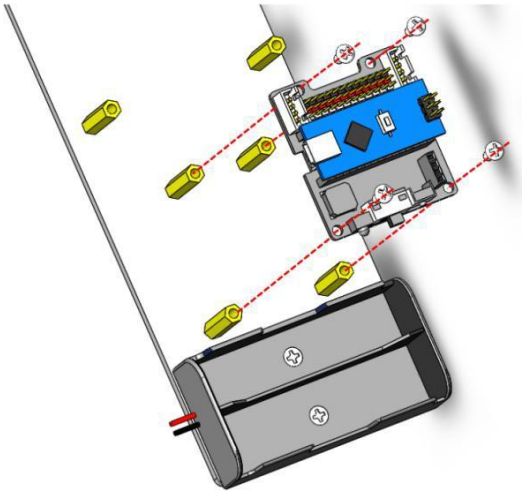 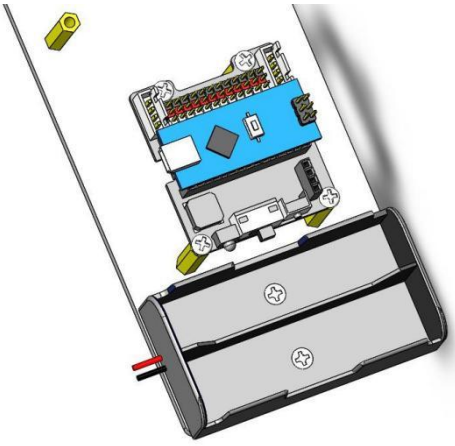

Step 4：Assembling the MG90 servo	Tool：

Need to prepare：

Structure B	1	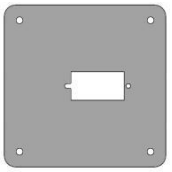
MG90S servo(purple label)	1	
M2 mm nut	2	
M2*8mm round head screw	2	

Demo：

Use M2 * 8mm round head screws and M2 nuts to install the MG90S servo(purple label) on the structural member B;	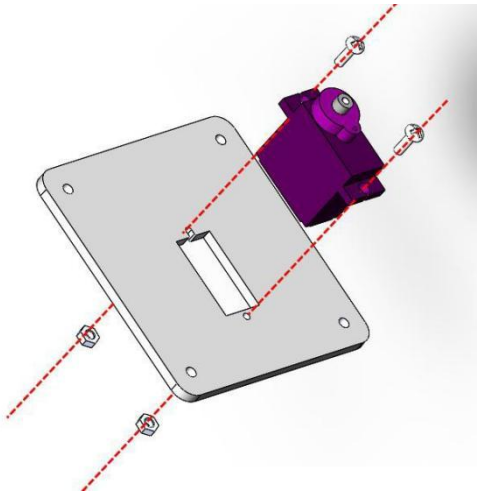 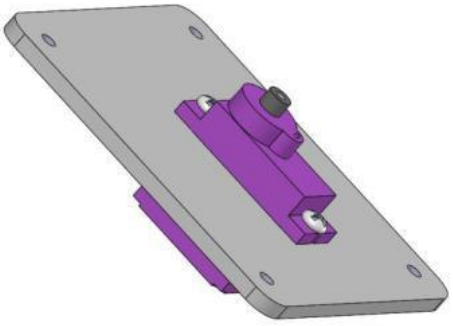

Step 5：Assembling the turntable, structure B, structure A		Tool：
Need to prepare：		
Step 3 structure	1	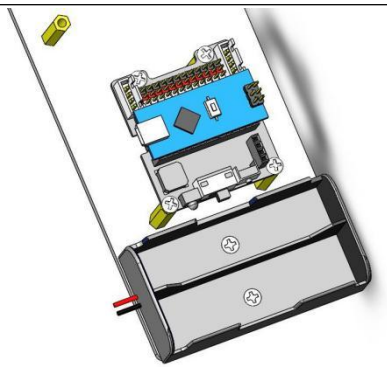
Step 4 structure	1	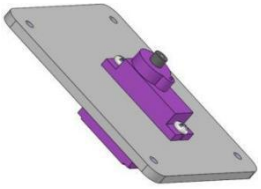
turntable	1	
ϕ3*3mm nylon column	4	
M3*12mm countersunk head screw	4	
Demo：		

Use M3 * 12mm countersunk head screws to fix the turntable, structure B, and nylon post on structure A;	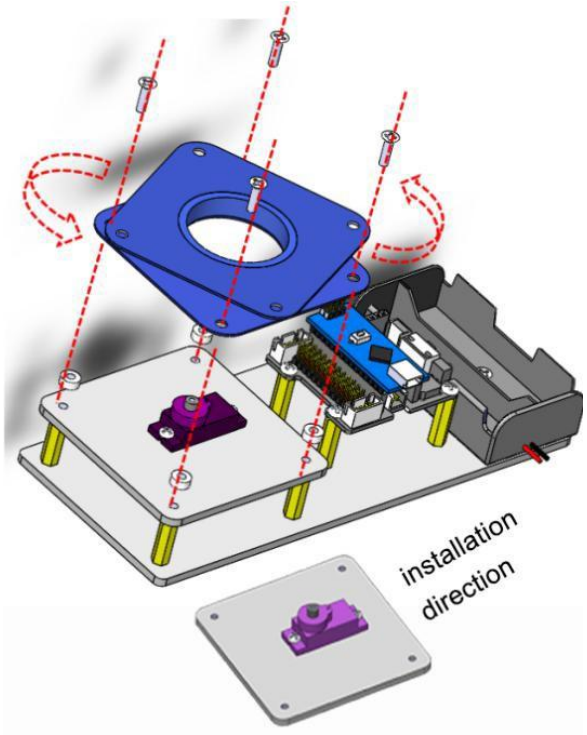 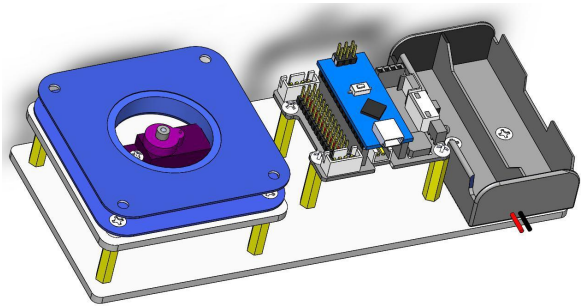

Step 6: Assembling the MG90 servo cross	Tool:

Need to prepare：

Structure S	1	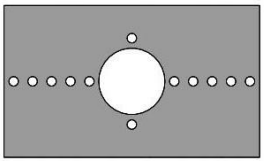

MG90S servo cross(black color)	1	
P1.2*4mm self-tapping screw	6	

Demo：

1. Use tools (scissors, art knife) to cut the cross turntable of theMG90S servo according to the dotted line in the figure

2.Use M1.2 * 4mm self-tapping screws to fix MG90 servo cross(black color) on structural member S;

Pay attention to the installation direction of MG90s servo cross

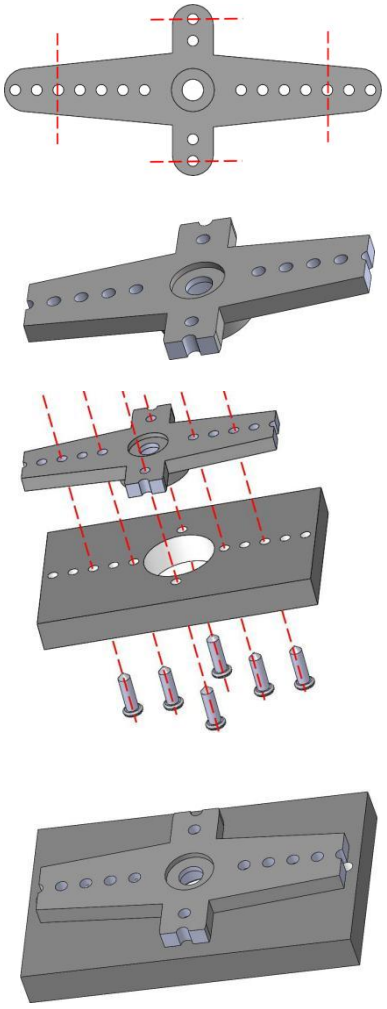

Step 7：Assembling Structure D, Structure E and Structure C	Tool：

Need to prepare：

Structure D	1	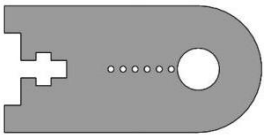
Structure E	1	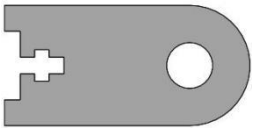
Structure C	1	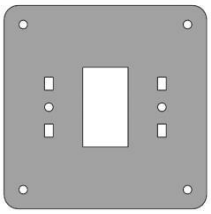
M3*10mm countersunk head screw	2	
P1.2*4mm self-tapping screw	3	
M3 nut	2	
Servo arm(white color)	1	

Demo：

Use M1.2 * 4mm self-tapping screws to fix the servo arm(white color) on the structure D; Pay attention to the direction of servo arm	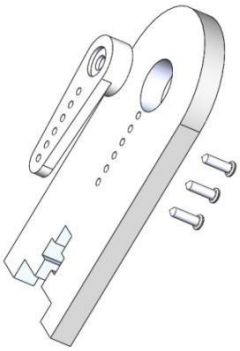 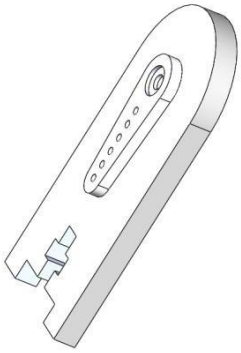

Use M3 * 10mm countersunk head screws and M3 nuts to fix structure D and structure E to structure C; Pay attention to the installation direction of structure D and E;	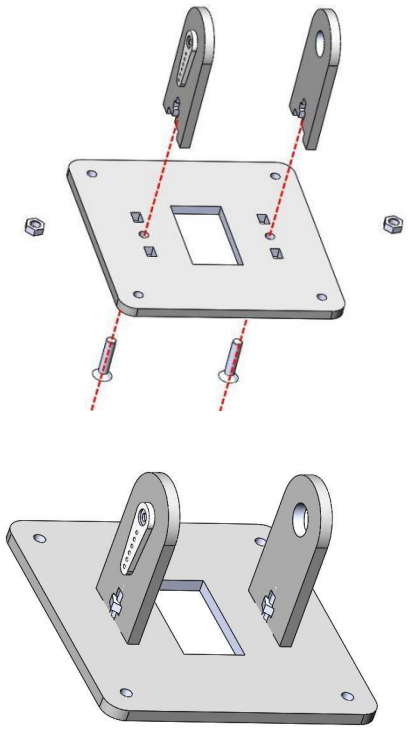

Step 8: Assembling Step 7 Structure and Step 5 Structure	Tool:

Need to prepare：

Step 5 Structure	1	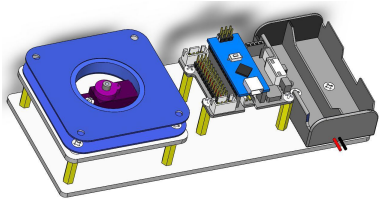
Step 7 Structure	1	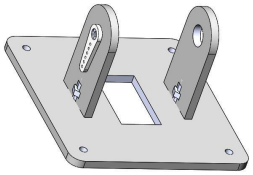
M3 * 8mm countersunk head screws	4	
M3 self-locking nut	4	

Demo：

Use M3*8mm countersunk screws and M3 self-locking nuts to install the step 7 structural parts on the step 5 structural parts;
Note: When installing the self-locking nut, you can rotate the shaft on the structure of step 5 to facilitate installation;

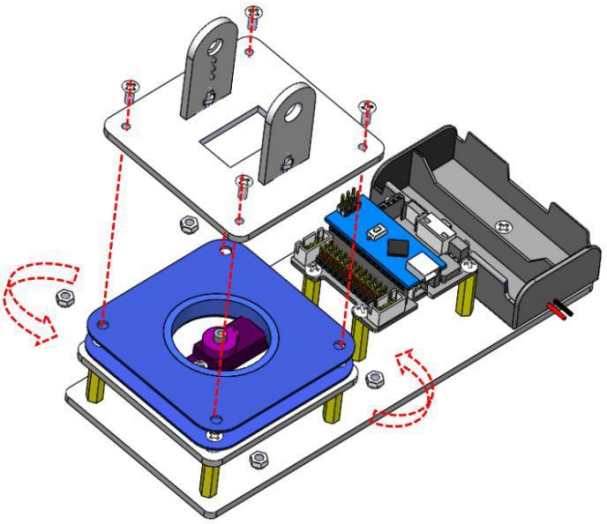

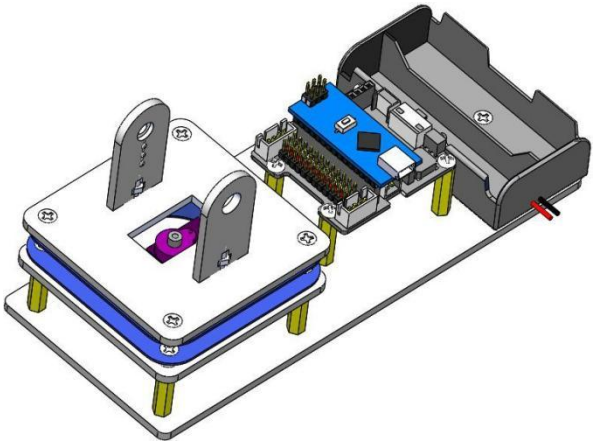

Step 9: Assembling Structure C and turntable	Tool：

Need to prepare：

Step 6 Structure	1	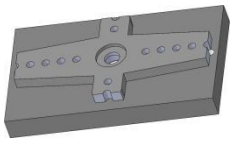

Step 8 Structure	1	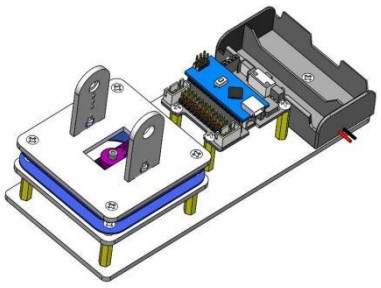
MG90S Servo Screw(packed with the MG90S Servo in a bag)	1	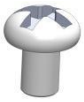
Demo：		
1. Ensure that the angle of MG90S servo(purple label) is reset to **90°** ; 2. Ensure that the side of structural member B is parallel to the side of structural member C; (the thick dotted line in the figure) 3. Use the M2.5 self-tapping screw(MG90S Servo Screw) that packed with the MG90 servo to fix.	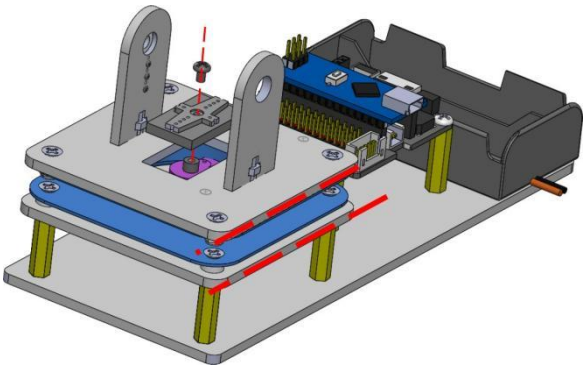 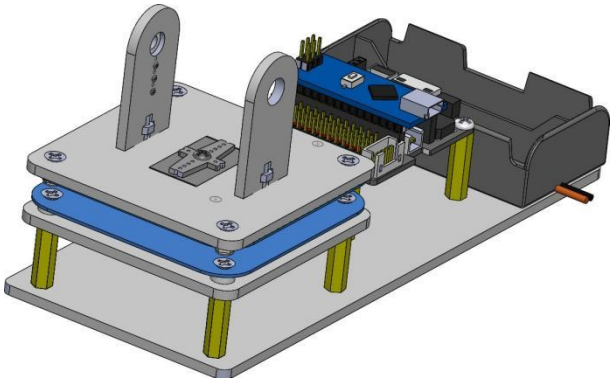	

Step 10: Assembling Structure F and SG90 Servo		Tool:
Need to prepare:		
Structure F	1	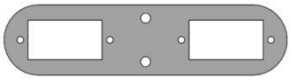
M2*8mm round head screw	4	
M2 nut	4	
SG90 servo(yellow label)	2	
Demo:		
Use M2 * 8mm round head screws and M2 nuts to install the SG90 servo(yellow label) on the structural part F; Note the install direction of the servo;		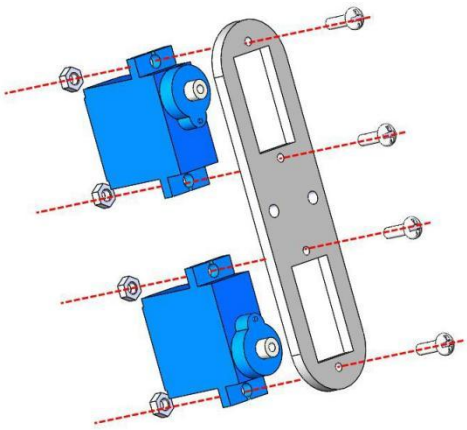 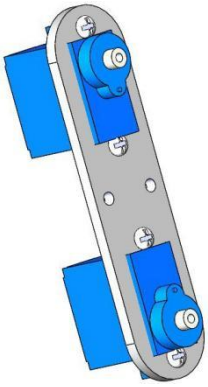

Step 11: Assembling Structure G and Structure H		Tool:
Need to prepare:		
Structure G	1	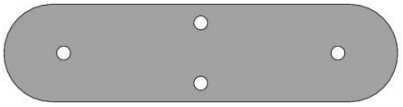
Structure H	1	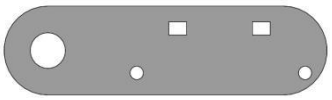
Step 9 Structure	1	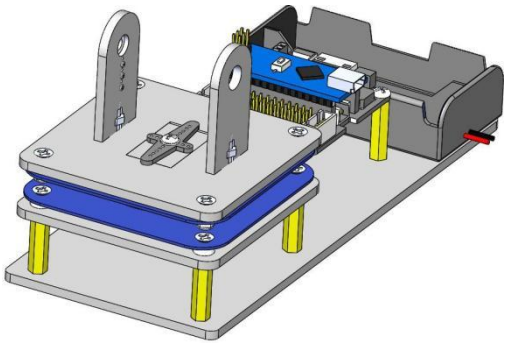
ϕ3*8*4 flange bearing F693ZZ	2	
M3 mm self-locking screw	2	
M3*10mm round head screw	2	
Demo:		

Use M3 * 10mm round head screws and M3 self-locking nuts to fix structure G, structure H and bearing; Pay attention to the installation order of structure G, structure H, and bearings;	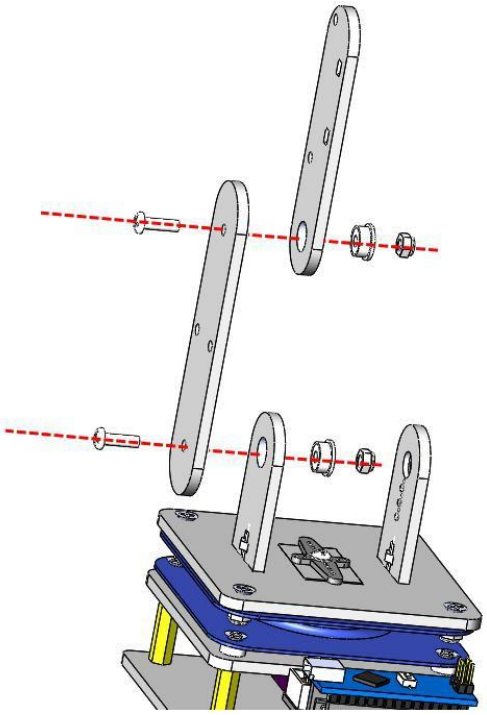 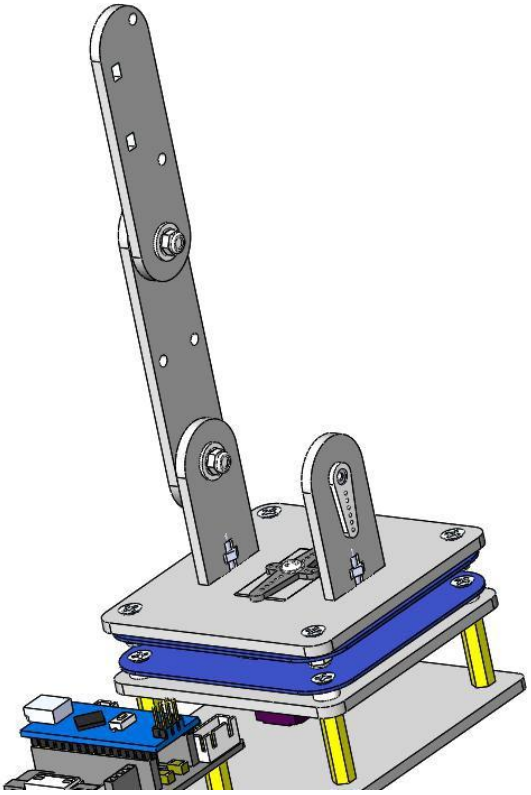

Step 12: Assembling Step 11 Structure and Step 10 Structure		Tool：
Need to prepare：		
Step 11 Structure	1	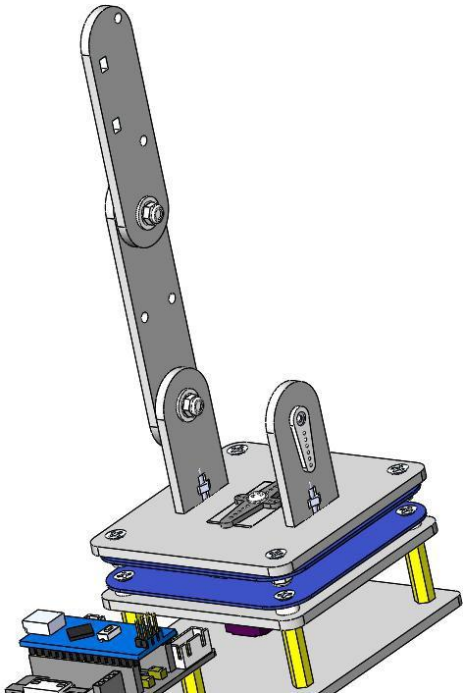
Step 10 Structure	1	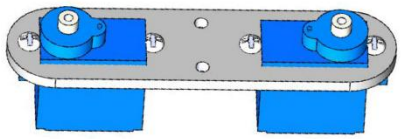
SG90 servo screw(packed with the SG90 Servo(yellow label) in a bag)	1	

Demo：

Ensure that the angle of SG90 servo (yellow label)is reset to **90°；**

Keep structure D and structure F parallel, shown by the red dotted line;

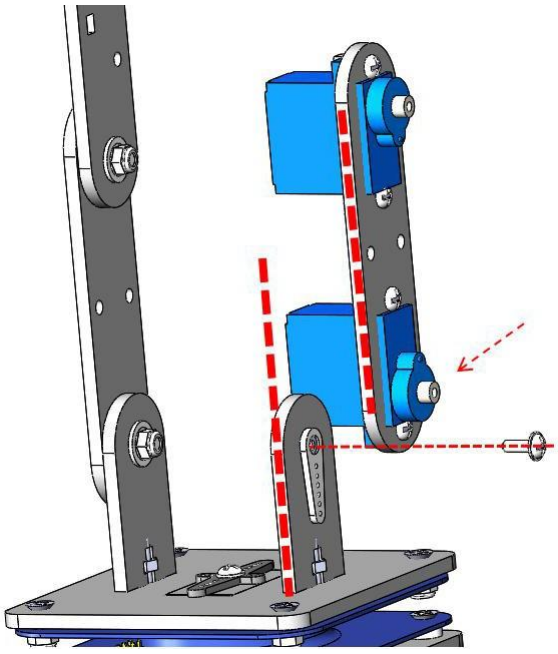

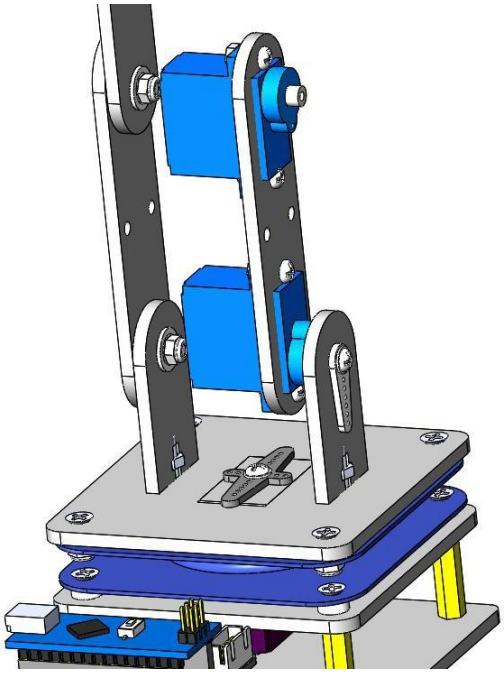

Step 13: Assembling M3*30MM aluminium column		Tool:
Need to prepare:		
Step 12 Structure	1	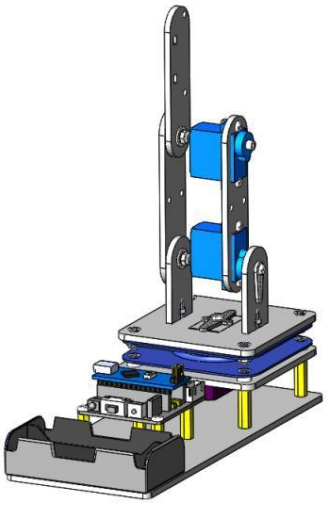
M3*30mm aluminium column(the short ones)	2	
M3*6mm round head screws	4	
Demo:		

Use M3 * 6mm round head screws to install the M3*30mm aluminium column on the step 12 Structure ;	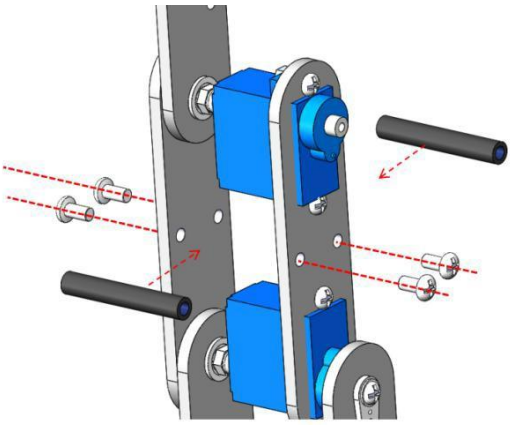 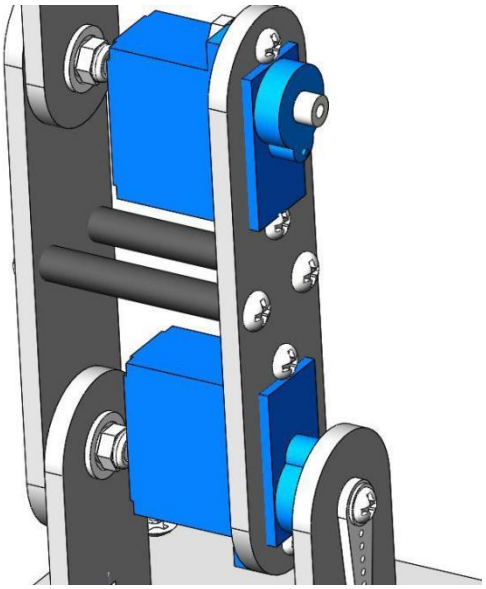

Step 14: Assembling Structure I and servo arm	Tool:

Need to prepare：

Structure K	1	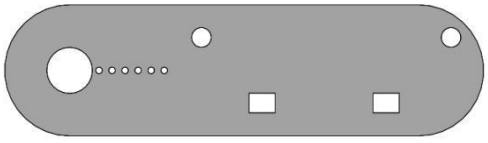
P1.2*4mm self-tapping screw	3	
servo arm(white color)	1	

Demo：

Use M1.2 * 4mm self-tapping screws to fix the servo arm(white color) on the structure K;
Pay attention to the mounting direction of the servo arm

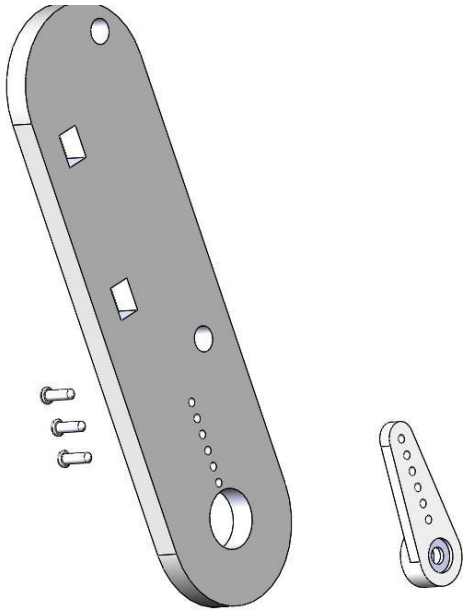

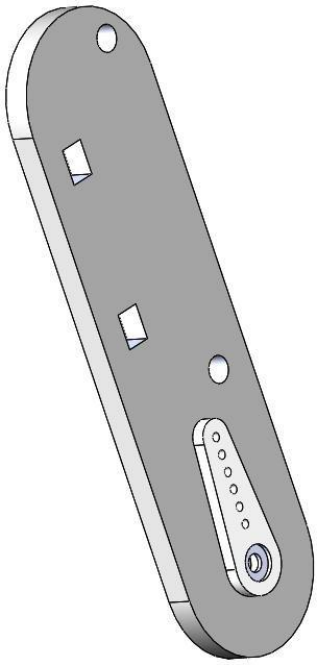

Step 15: Assembling Structure J and servo		Tool:
Need to prepare:		
Structure M	1	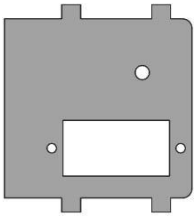
SG90 Servo(yellow label)	1	
M2*8mm round head screw	2	
M2 nut	2	
Demo:		
Use M2 * 8mm round head screws and M2 nuts to install the servo on the structure M; Pay attention to the installation direction of the servo;		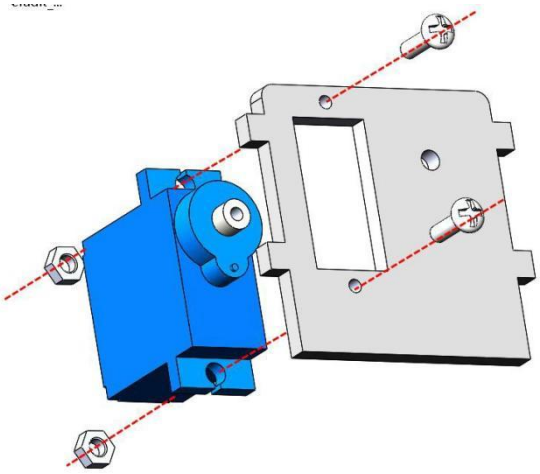 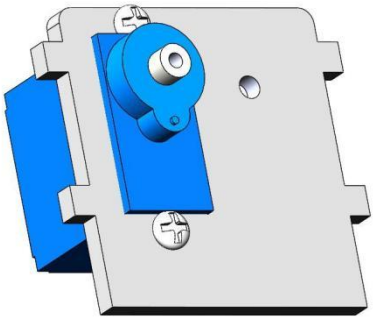

Step 16: Assembling Step 13 Structure, Step 14 Structure and Step 15 Structure		Tool:
Need to prepare:		
Step 13 Structure	1	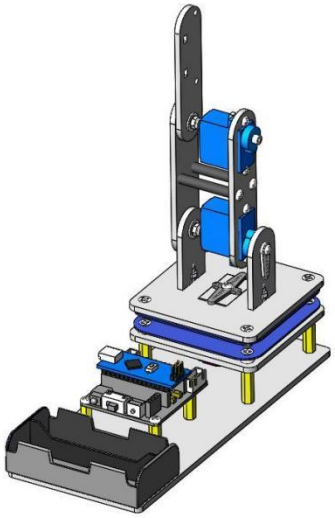
Step 14 Structure	1	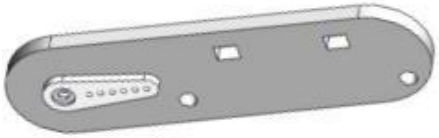
Step 15 Structure	1	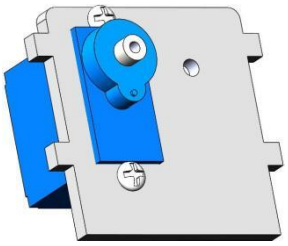
M3*37mm Aluminium column	2	
M3*6mm round head screw	4	
Servo screw(packed with the SG90 Servo(yellow label) in a bag)	1	

Demo：

The side of structural member K and the side of structural member F are kept parallel when install structural part M and structural part H (see the red thick dashed line is shown in the figure);	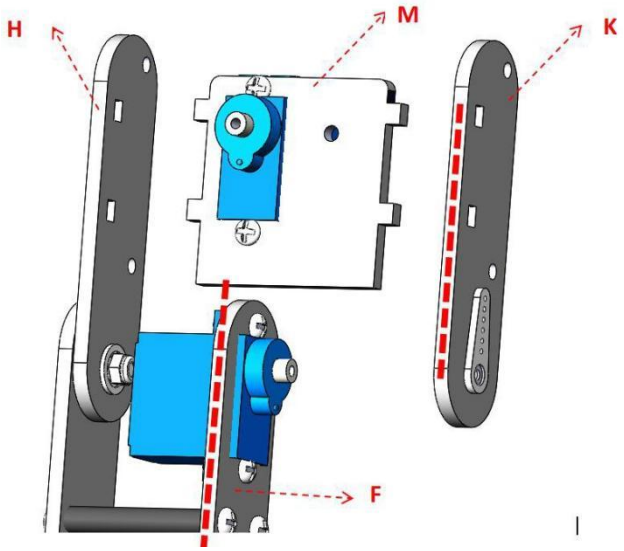
Use the self-tapping screws of the servo to fix the single arm of the servo(white color) and the servo shaft (the screw fixing force needs to be moderate) Use M3*6mm screws to install the aluminum column between the structural part H and the structural part K;	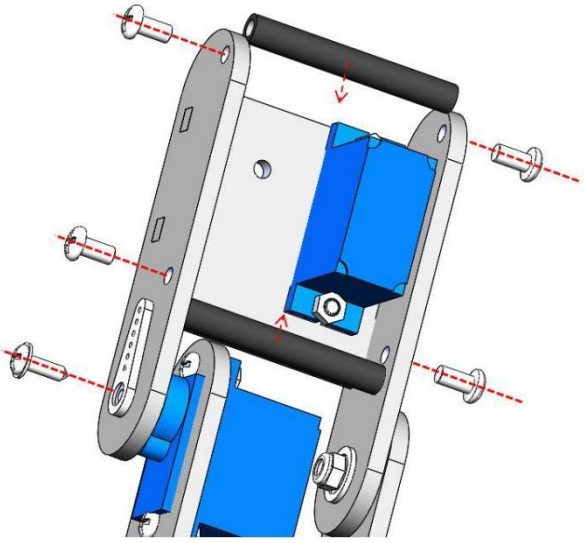

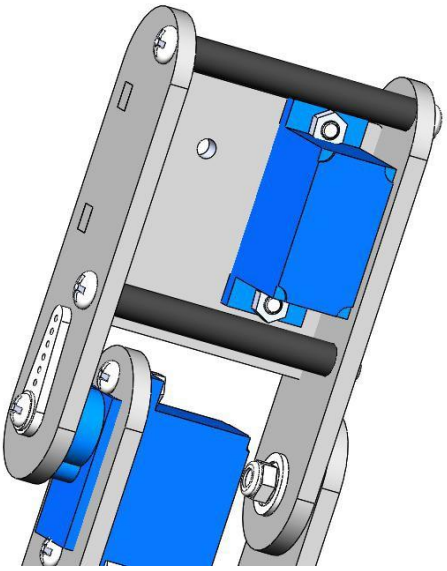

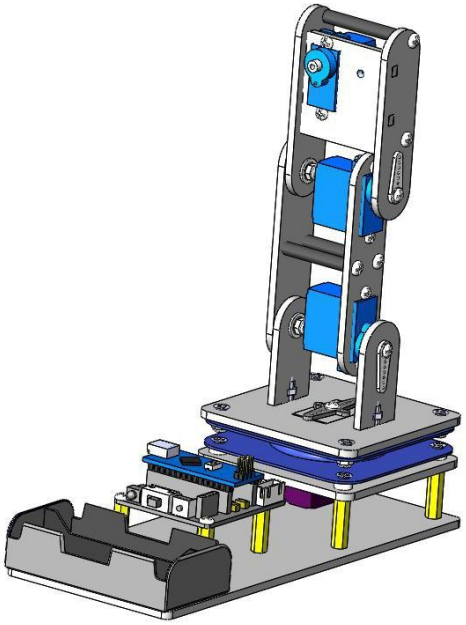

Step 17: Assembling the left finger of the hand	Tool：

Need to prepare：		
Structure N	1	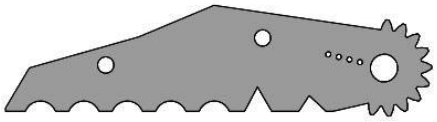
Structure L	1	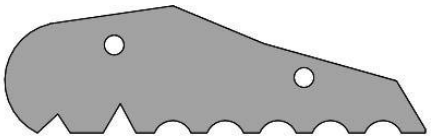
Servo arm(white color)	1	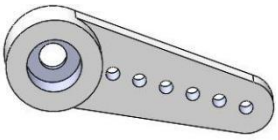
P1.2*4mm self-tapping screw	3	
M3*6 black nylon stud	2	
M3*5 black nylon screw	4	
Demo：		

1. 1. Use M1.2*4mm self-tapping screws to fix the single arm of the servo(white color) on the structure N; (pay attention to the direction) 2. Use M3*5mm nylon screws to fix the nylon column, structural part N, and structural part L; (note the direction)	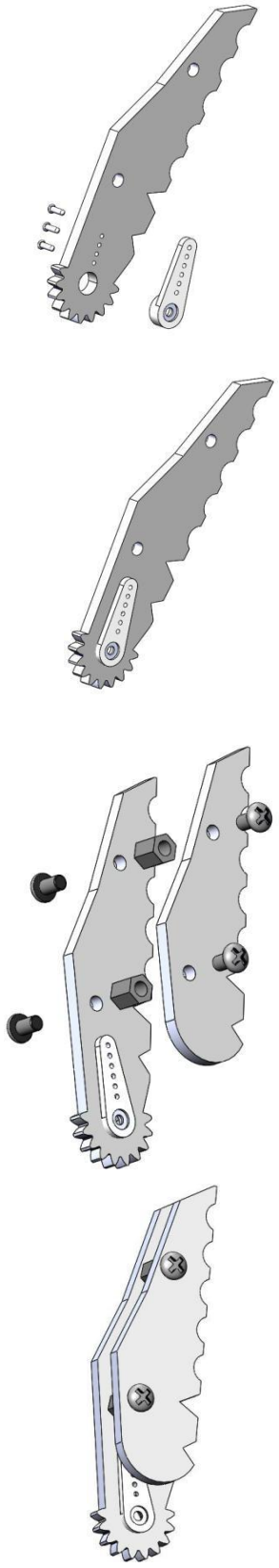

Step 18: Assembling right finger of the hand		Tool：
Need to prepare：		
Structure X	1	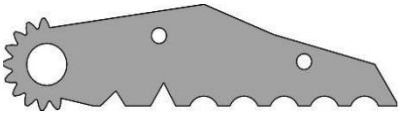
Structure L	1	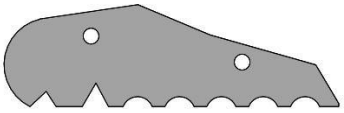
M3*6mm black nylon stud	2	
M3*5mm black nylon screw	4	
Demo：		
Use nylon screws and nylon studs to fix the structure L on the structure X;		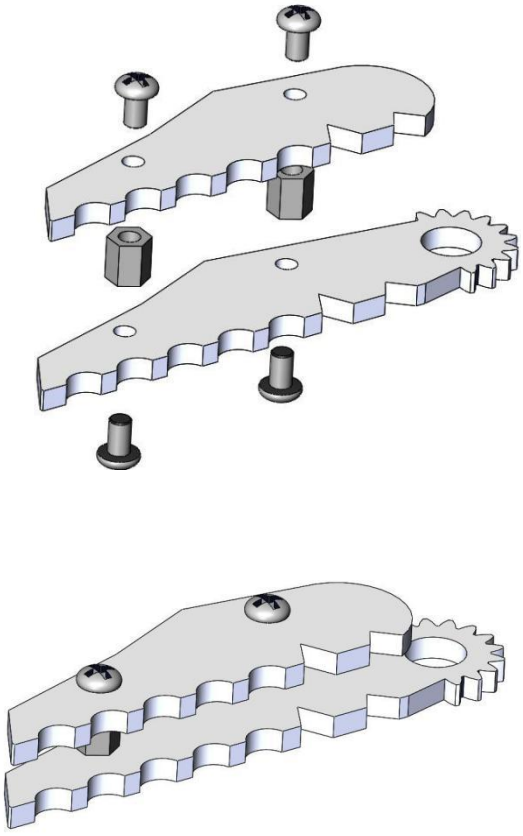

Step 19: Assembling Step 16 Structure and robot finger		Tool:
Need to prepare:		
Step 16 Structure	1	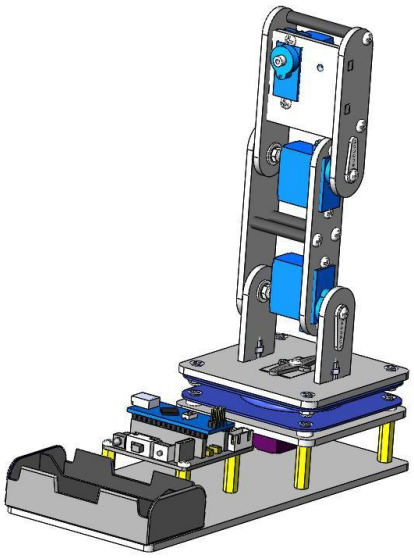
Left finger	1	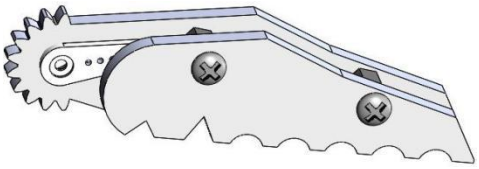
Right finger	1	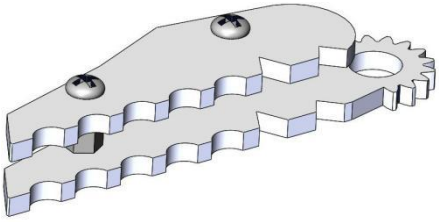

Structure P	1	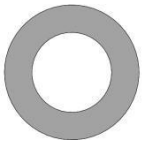
ϕ3*8*4 flange bearing F693ZZ	2	
M3 Flat pad	3	
M3*18mm countersunk head screw	1	
M3 mm self-locking screw	1	
Servo screw(packed with the SG90 Servo(yellow label) in a bag)	1	

Demo：

Ensure that the angle of SG90 servo(yellow label) is reset to **90°；** 1. The left part of the claw and the servo shaft on the structural member M are installed at 90 degrees; (as shown in the figure) 2. Use the screw that come with the servo to fix the clip on the left	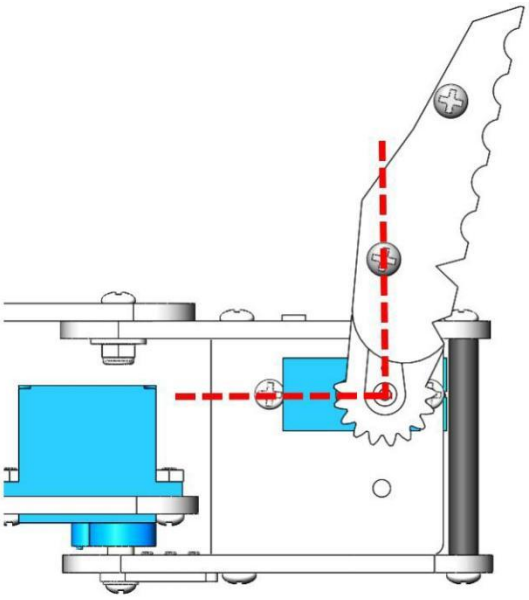

	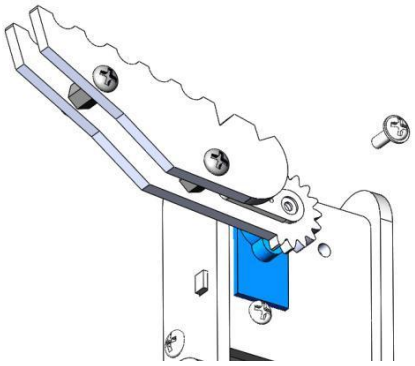 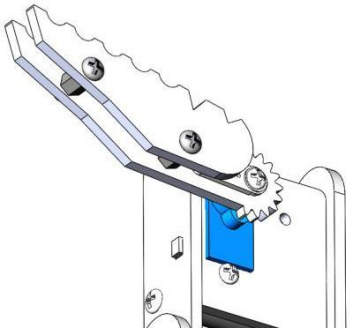
Use M3 * 18mm countersunk head screws and M3 self-locking nuts to fix the bearing, right finger, structure N, and Flat pad on structural part J Note: 1. Install in order; 2. Be careful not to damage the gear;	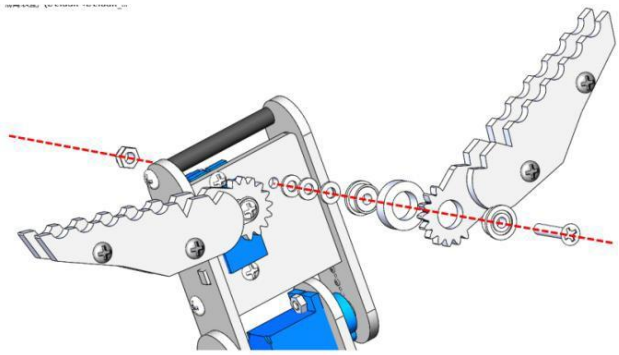

	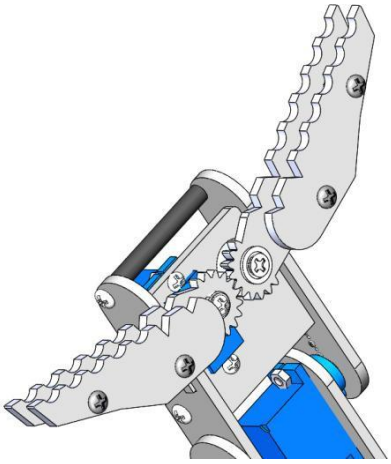

Step 20: Assembling the joystick controller	Tool：

Need to prepare：

Structure K	1	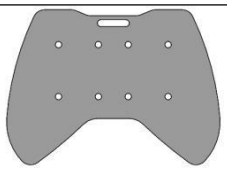
Structure L	2	
M3*10mm round head screw	8	
N3 nut	8	
ϕ3*3mm nylon column	8	

Demo：

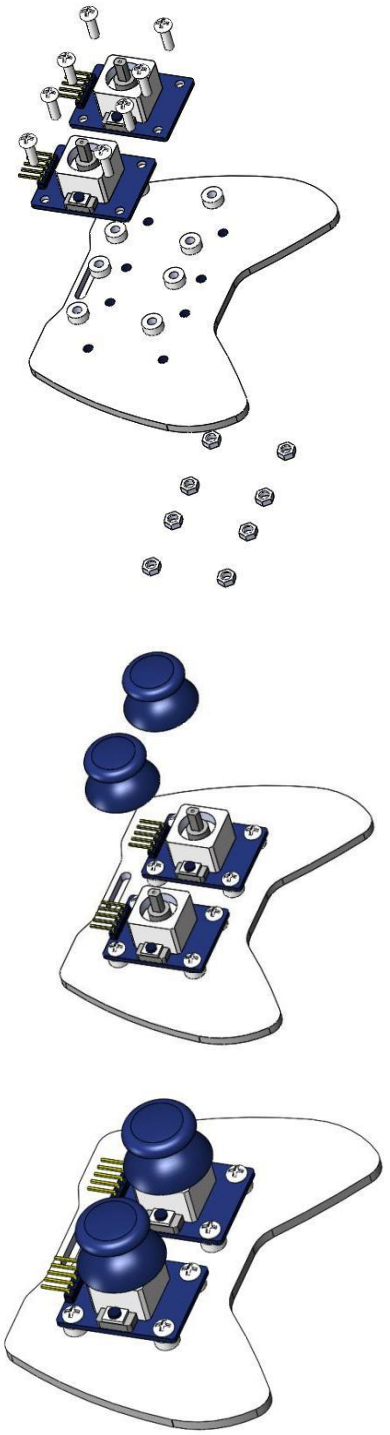

Step 21: Wiring Method	Tool:

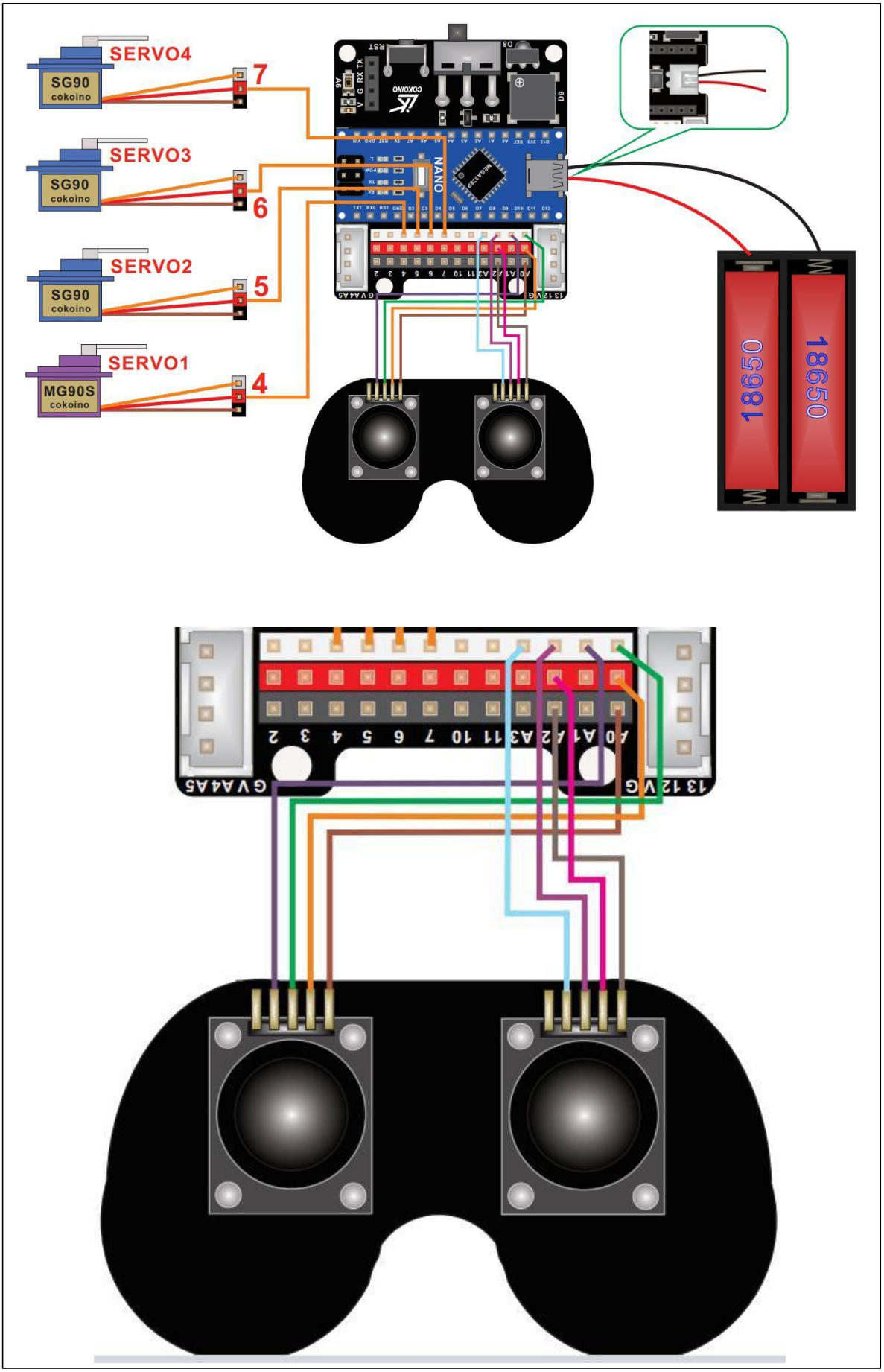
SERVO4
SG90
cokoino
7
SERVO3
SG90
cokoino
6
SERVO2
SG90
cokoino
5
SERVO1
MG90S
cokoino
4
NANO
18650
18650

Step 22: Arrange the wires of the servo	Tool:	
Need to prepare:		
Find something like ropes or nylon binding tapes	2	
wire organizing tubes(can be used or not)	2	
Demo:		
Use nylon binding tapes and wire organizing tube to organize the wires of the four servos. They are used for aesthetics and to prevent the servo wires from hindering the normal work of the servos.	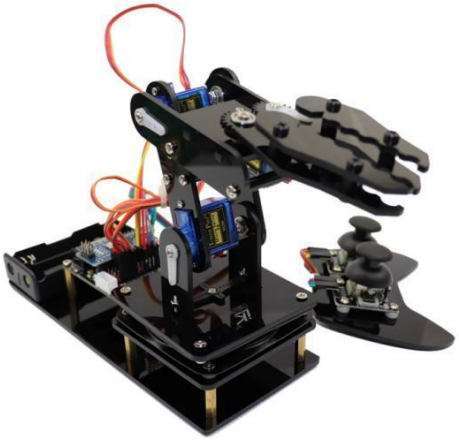 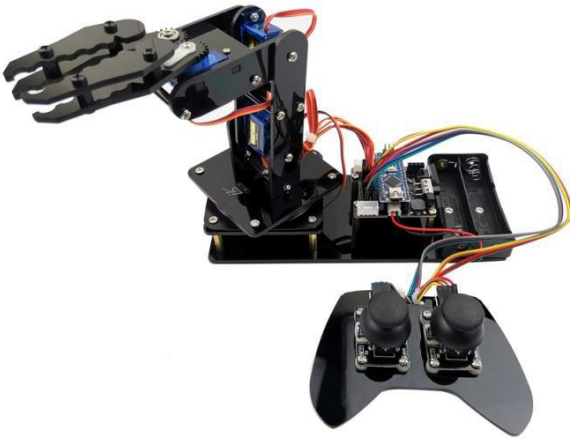	

Finally, rotate the base of the robotic arm left and right by hand to keep it smooth and prevent it from getting caught in the servo wires.	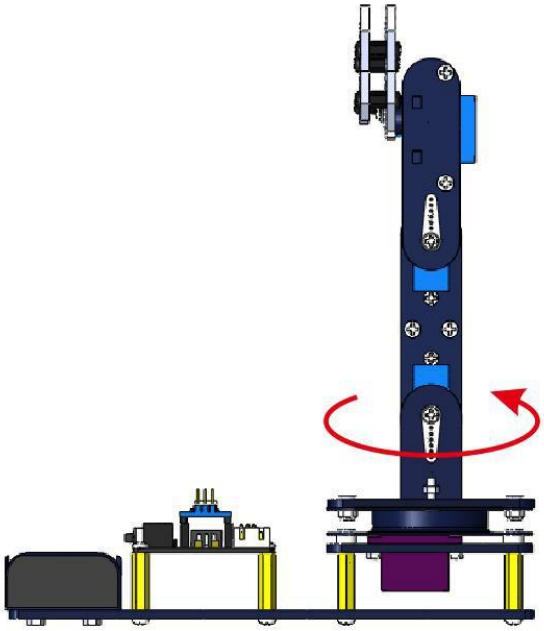 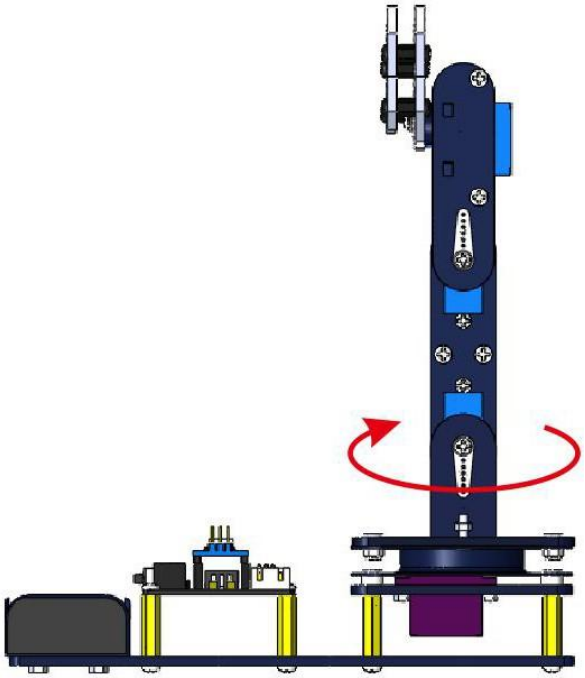
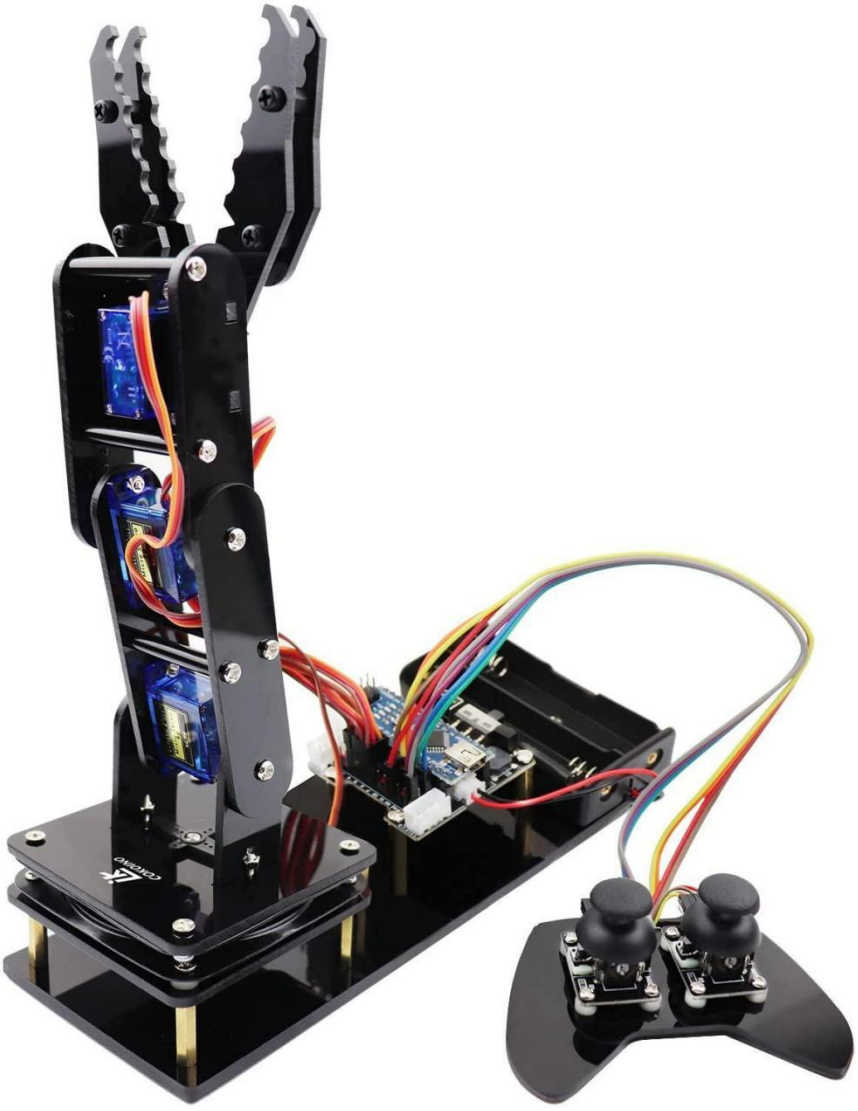
Congratulations, a cool robot is done